RevNo	Revision note	Date	Signature	Checked

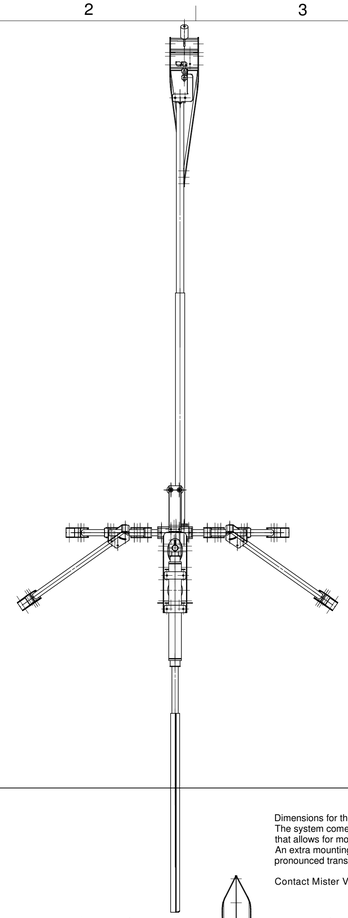

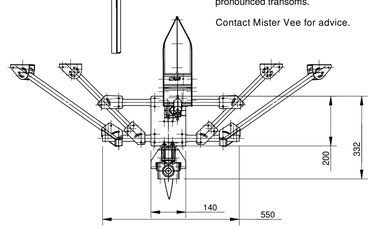

Dimensions for the mounting kit are not shown.
The system comes with one carbon fiber mounting tube that allows for mounting as shown here as well as other options. An extra mounting tube may need to be ordered for more pronounced transoms.

Contact Mister Vee for advice.

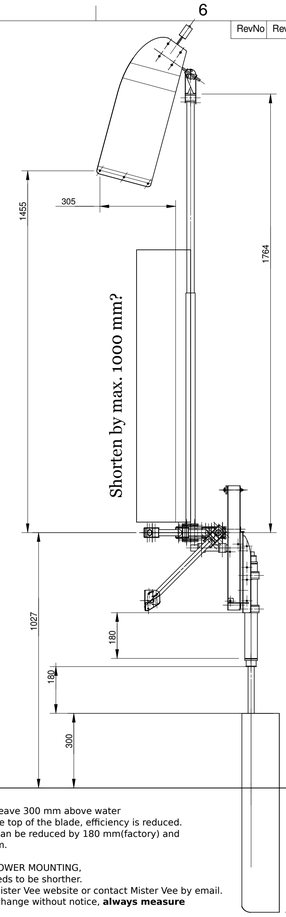

The height of the vane mast can be reduced as part of the assembly process as well as after mounting to the boat.

The windvane in this drawing is shown as if the boat is on a running course.

For optimum efficiency leave 300 mm above water
If water can flow over the top of the blade, efficiency is reduced.
The height 1072,1 mm can be reduced by 180 mm(factory) and 180 mm (DIY) to 711 mm.

IF YOU NEED AN EVEN LOWER MOUNTING,
the the rudder blade needs to be shorther.
Search the FAQ on the Mister Vee website or contact Mister Vee by email.
These dimensions may change without notice, **always measure in situ before cutting.**

Edition	Sheet